AIRAID®
INTAKE SYSTEMS

Installation Instructions
Part Number 200-146
03-07 Hummer H2
05-07 Hummer SUT
6.0L V-8

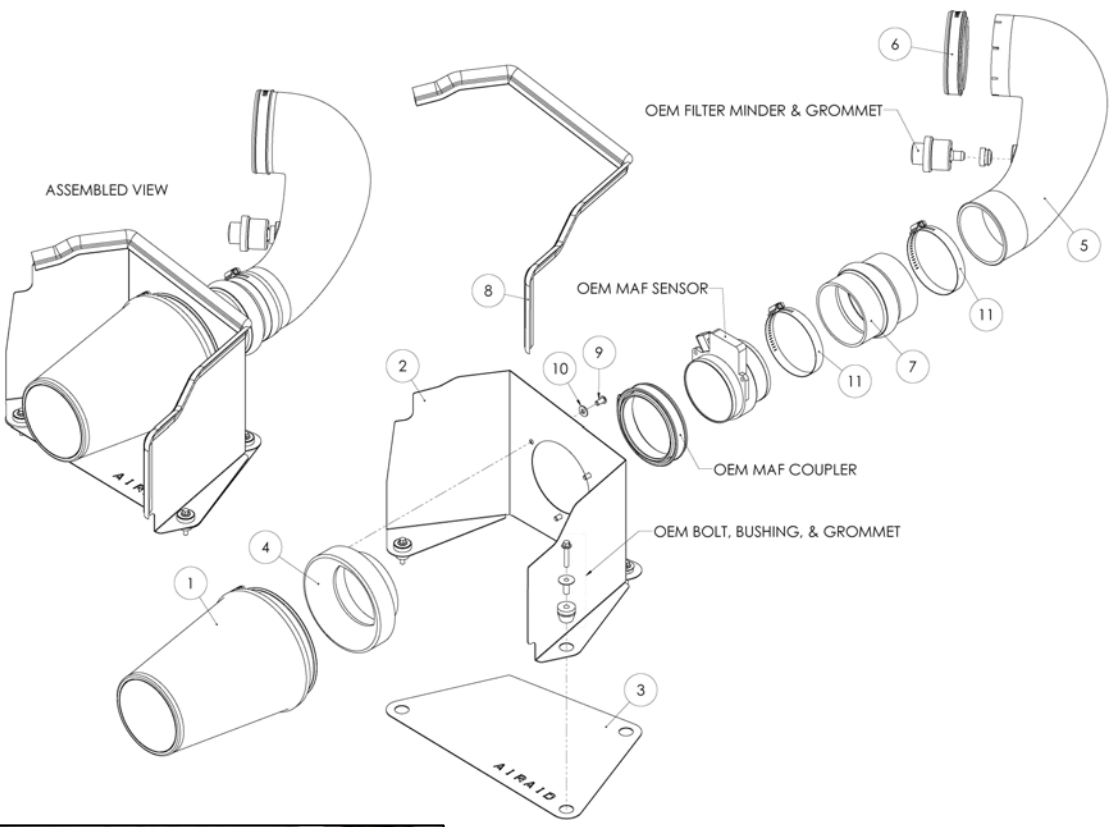

Packing List:

#1	700-469	Airaid Premium Filter	1
#2	KIT182MAFSC	Airaid MAF Panel	1
#3	KIT182BPC	Airaid Bottom Panel	1
#4	KIT1121MAFADA	Filter Adapter	1
#5	KIT983T	Modular Intake Tube	1
#6	KITCOUPLER02	Coupler W/#68 Clamp	1
#7	KITHUMPHS02	Urethane Hump Hose	1
#8	KITWSTRIP02	Weather Strip 25"	1
	KIT146HP	Hardware & Instructions	1
#9	KIT15DHC3050	¼-20 Button Head Bolt	3
#10	KIT09FWZ019	¼" Flat Washer	3
#11	KITHS60	#60 Hose Clamp	2

Tools Required For Installation:

Flat Head Screwdriver
5/16" & 10mm Sockets
Ratchet and Extension

PROUDLY MADE IN THE USA

1. **Disconnect negative battery cable.** Remove the factory filter minder and rubber grommet from the factory intake tube, retain for re-installation later in the install.

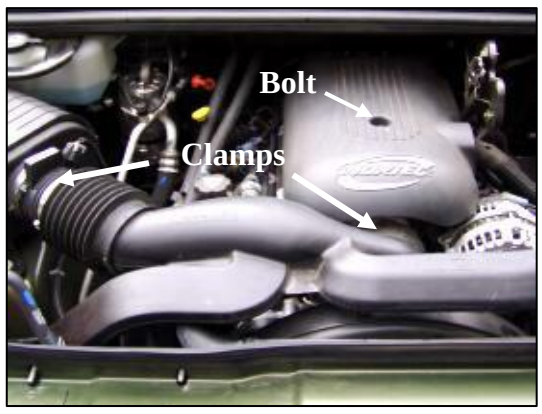

2. Loosen the recessed bolt and remove the beauty cover. Loosen the factory hose clamps on each end of the factory intake tube and remove it from vehicle.

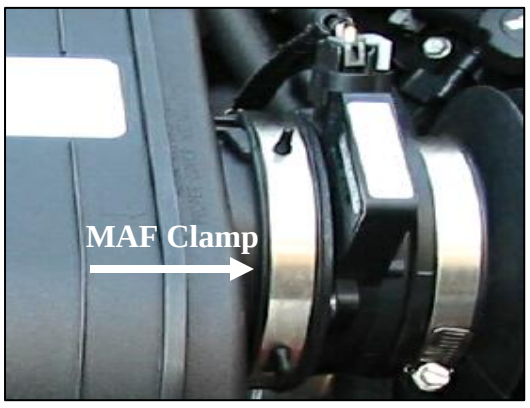

3. Loosen the **M**ass **A**ir **F**low sensor hose clamp. Remove the **MAF** sensor from the factory air box and temporarily set it aside. Use caution to retain the factory coupler & hose clamp on the **MAF**.

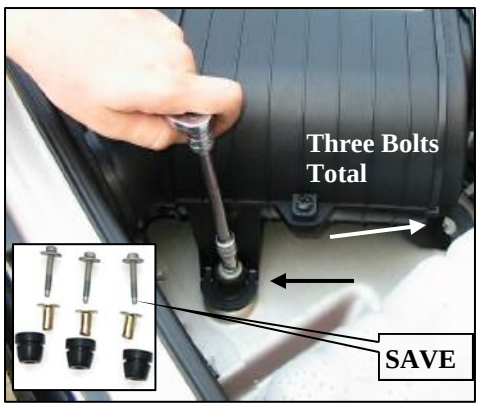

4. Remove the three factory air box hold down bolts, bushings, and grommets. Save them for the Airaid installation.

5. Remove the factory air box assembly from the engine compartment.

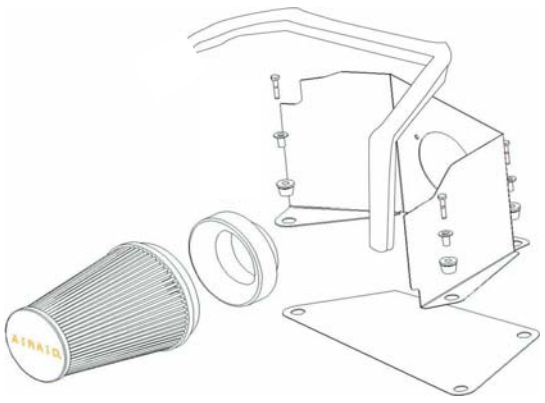

6. Align Cool Air Dam panels (#2, #3) & fasten together with saved grommets and bushings from step #4. Install the filter adapter (#4) using the 3 provided button head bolts (#9) and washers (#10).

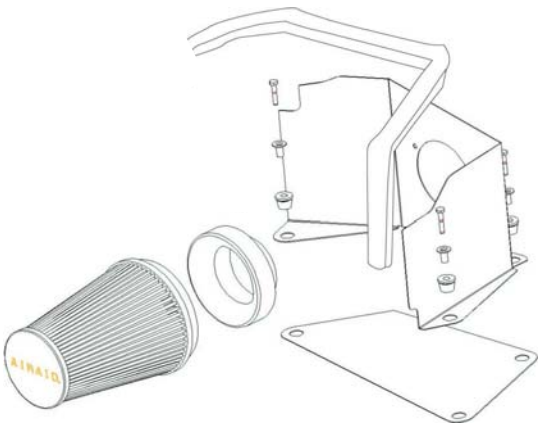

7. Install the weather strip (#8) onto the top of the Airaid Cool Air Dam. (*Hint: for easier installation start at one end or the other, not in the middle*).

8. Mount the Airaid Premium filter (#1) onto the filter adapter and secure with the hose clamp.

9. Position the Airaid system over the three factory mounting points & secure with the three saved factory bolts removed in step #4.

10. Install the **MAF** sensor to the filter adapter (#4), and tighten the hose clamp .

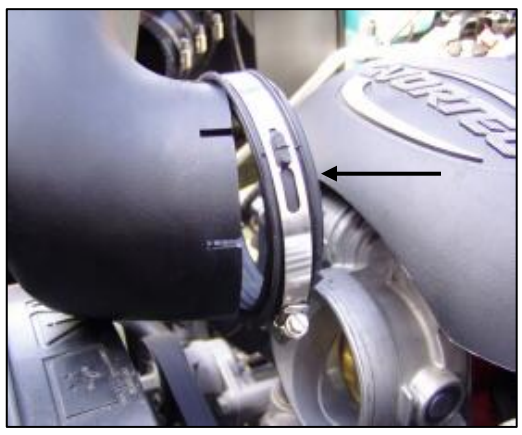

11. Install the provided coupler with clamp (#6) onto the Airaid **M**odular **I**ntake **T**ube (MIT) (#5).

12. Install the provided urethane hump hose (#7) onto the Airaid **M**odular **I**ntake **T**ube (**MIT**) (#5) with the 2 supplied #60 hose clamps (#11). **Note:** Leave hose clamps loose until final assembly.

13. Connect the Airaid **MIT** (#5), hump hose end first, to the **MAF** sensor, and then connect the other end of the tube assembly to the throttle body. Check for interference and adjust the **MIT** accordingly, and then tighten the hose clamps.

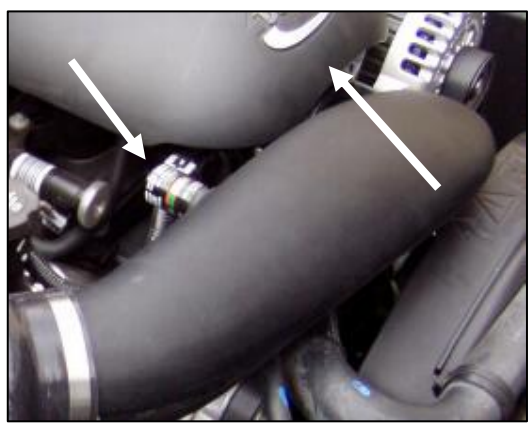

14. Re-install the factory filter minder and rubber grommet into rear of Airaid **MIT**. Re-install the beauty cover from step 2.

15. Double check your work!
Make sure there is no foreign material in the intake path. Make sure all clamps, hoses, bolts, and screws are tight.

16. Reconnect the negative battery cable!

Included with your Airaid Intake System is a sticker with a **C**alifornia **A**ir **R**esources **B**oard (C.A.R.B.) **E**xecutive **O**rder (EO) number. This sticker must be placed in plain view inside of the engine compartment. Failure to do so may prevent you from passing a smog inspection.

Before!

After!

Thank you for purchasing the Airaid Intake System. Contact Airaid @ (800) 498-6951 8:00 AM - 5:00 PM MST weekdays for questions regarding fit or instructions that are not clear to you. Your Airaid Intake System was carefully inspected and packaged. Check that no parts are missing, or were damaged during shipping. If any parts are missing, contact Airaid. The air filter element is protected from direct exposure to water and debris; care should be taken not to drive through deep water. WATER INGESTION IS THE DRIVERS RESPONSIBILTY! The air filter is reusable and should be cleaned using the Airaid Filter Tune-Up Kit periodically.

Don’t Forget Your AIRAID Filter Tune-Up Kit!

AIRAID NO HASSLE! WARRANTY

P/N 790-551 Aerosol Spray
P/N 790-550 Squeeze Spray

Instructions Revision Date: 03/21/08

Airaid Filter Co. 2688 E Rose Garden Ln. Phoenix AZ 85050 (800) 498-6951 AiraidInfo@airaid.com www.airaid.com